ANGELO PO - BRASIERA GAS 130 L.
2A1BR2G - 28-01-2009 » 24-06-2011

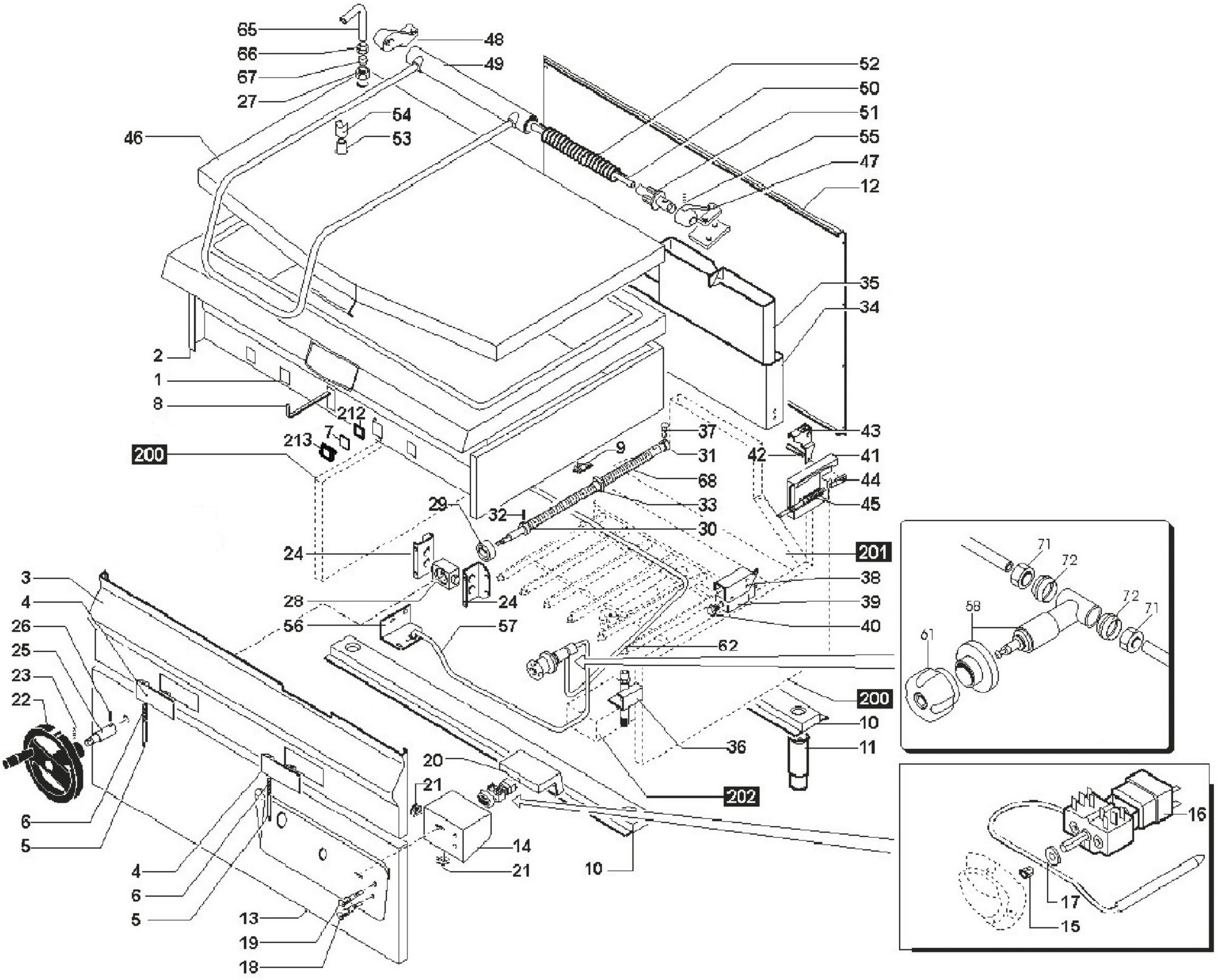

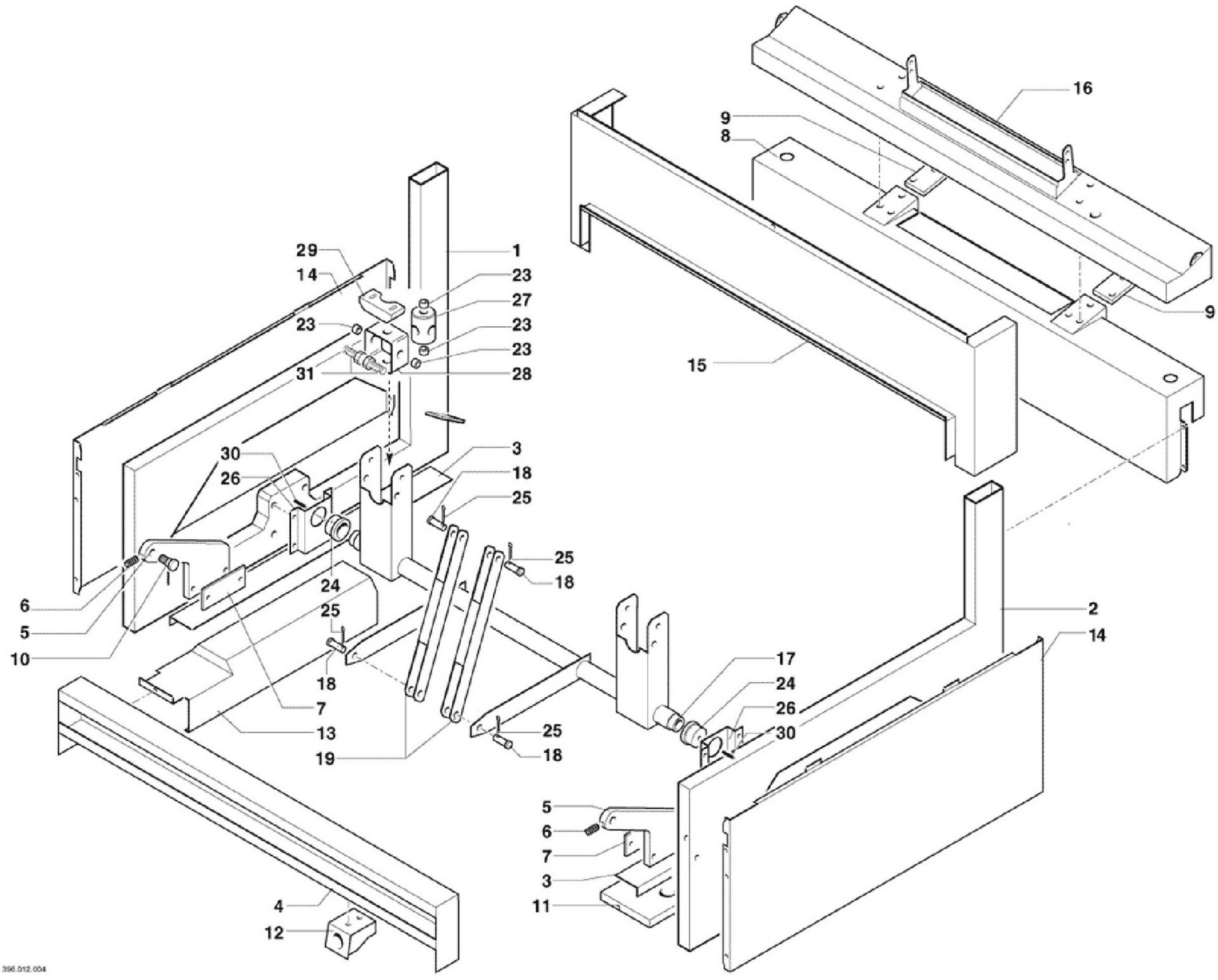
16
9
8
9
15
29
14
1
23
27
23
23
23
31
28
30
26
3
18
25
25
18
24
25
6
5
10
18
7
13
19
25
18
17
24
26
30
2
14
5
6
7
3
11
4
12
IDM - 396.012.004

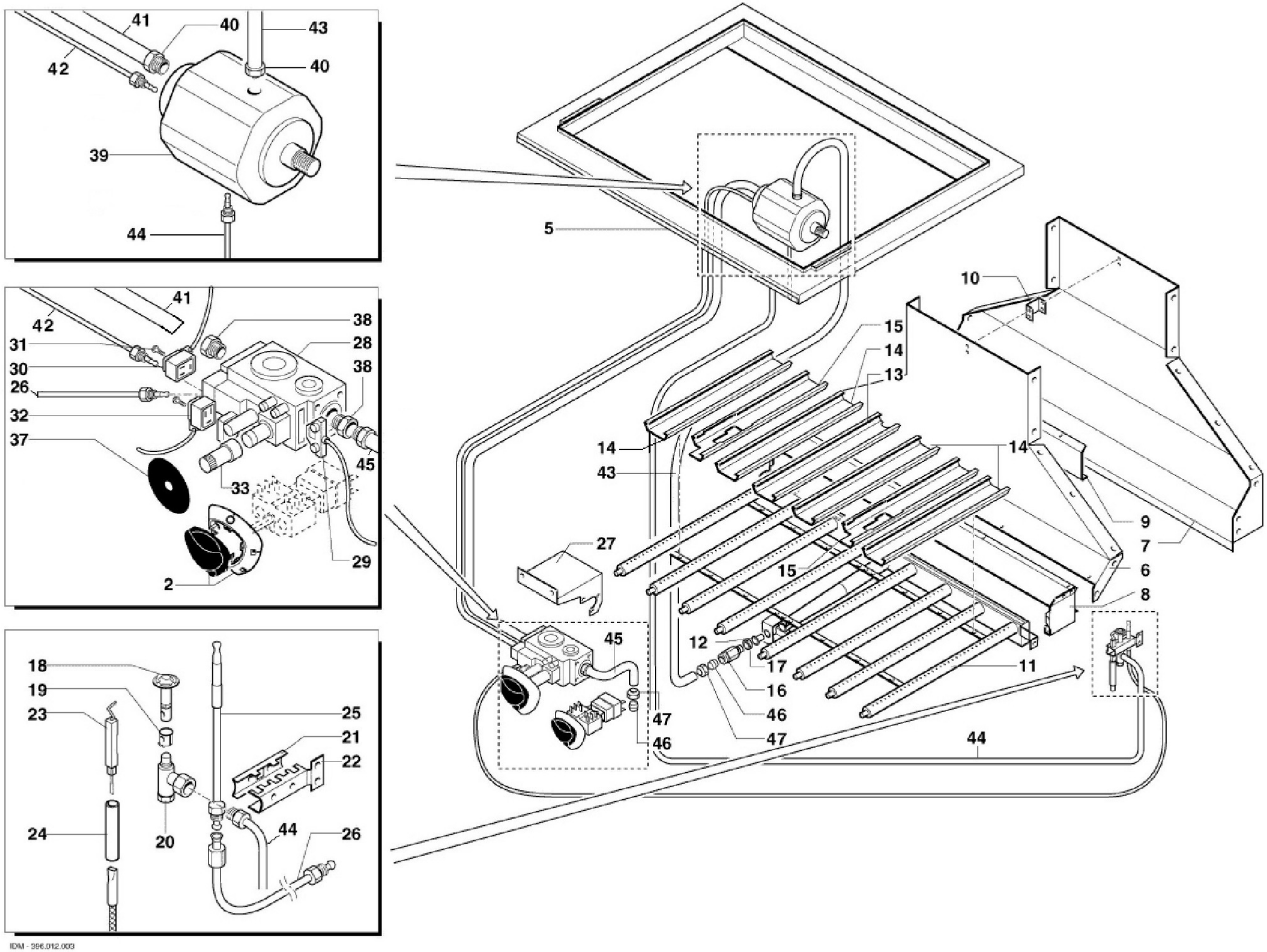

IDM - 396.012.003

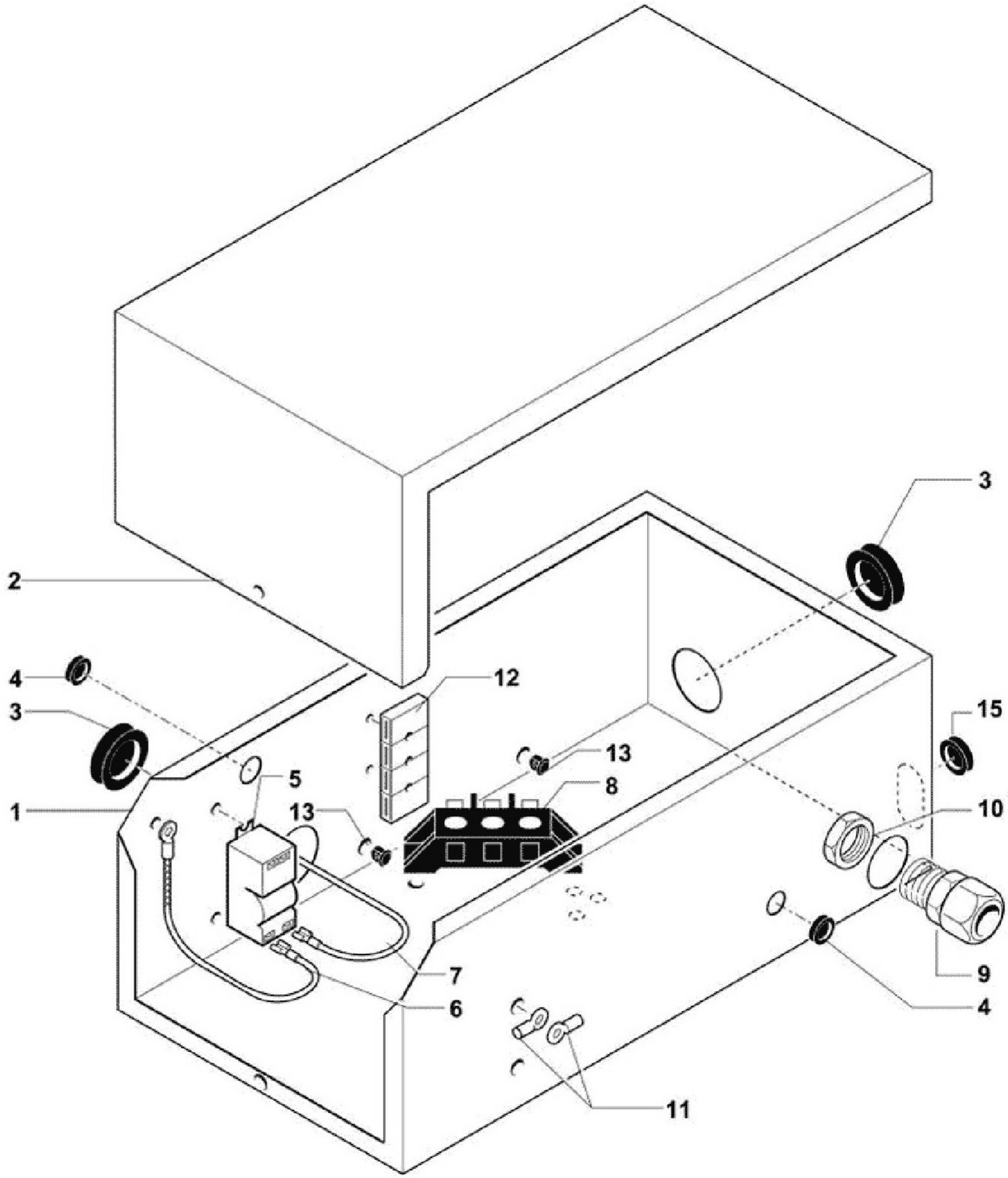
3
2
4
12
3
15
13
5
8
1
13
10
7
9
6
4
11

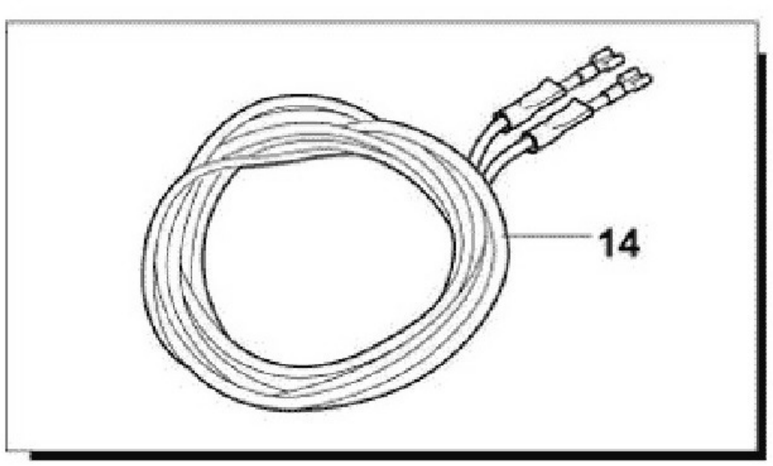
14